Specification:
Population range: 150 persons
Measures: 980 x 620 x 245 cm(l,w,h)
Area Requirement: 63m²
Sludge treatment: Sludgestabilization
Max. organic loading: 9,00 kg/day
Max. average daily flow: 22,50 m³/day
Max. blower power consumption: 1,7 KW
Weight (total/plug&play): 26,94 to
Total capacity: 60m³

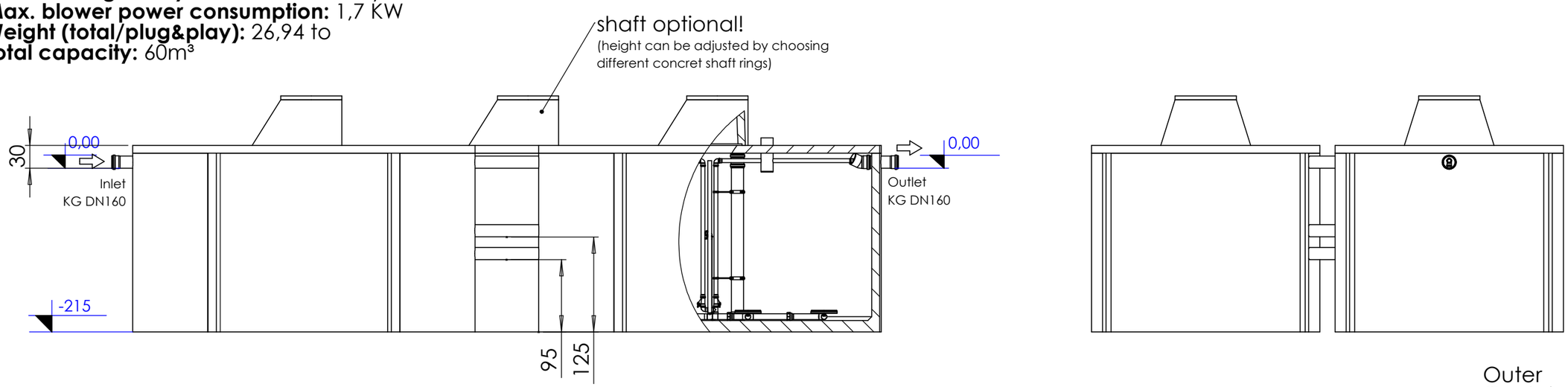

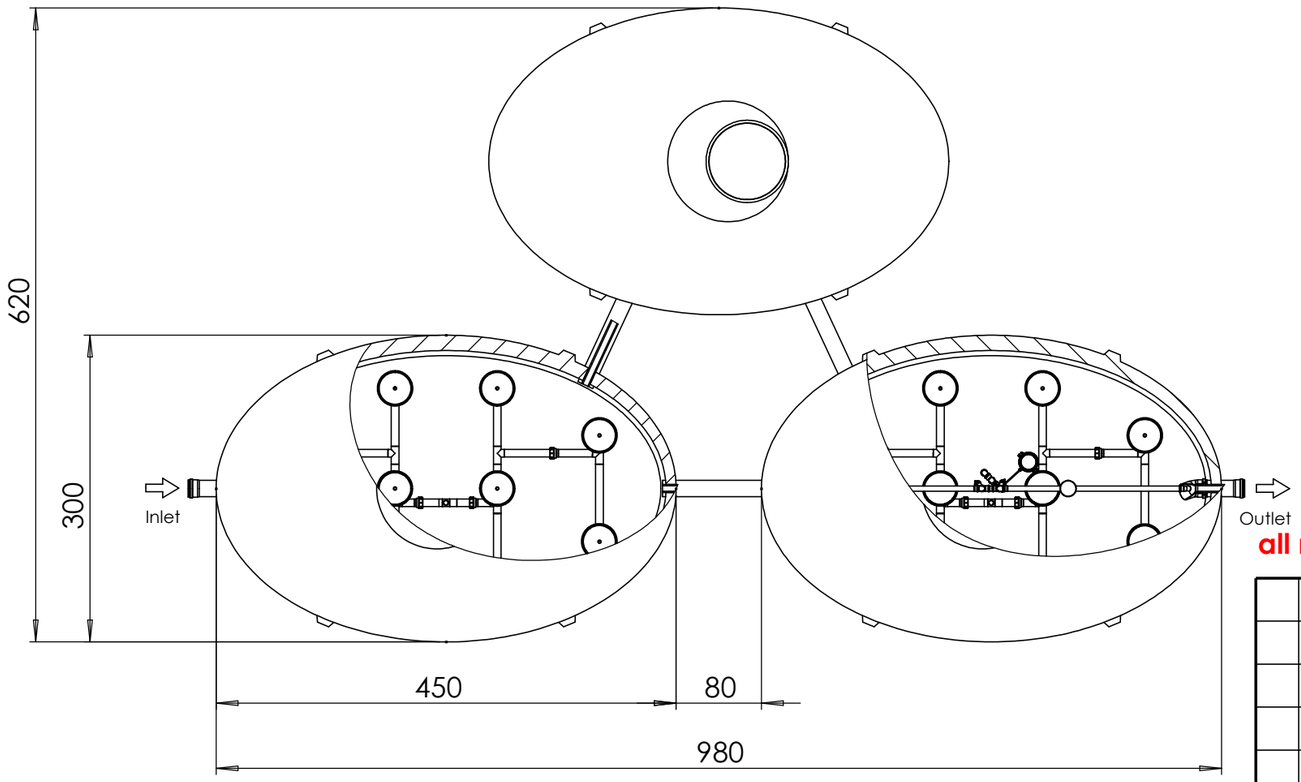

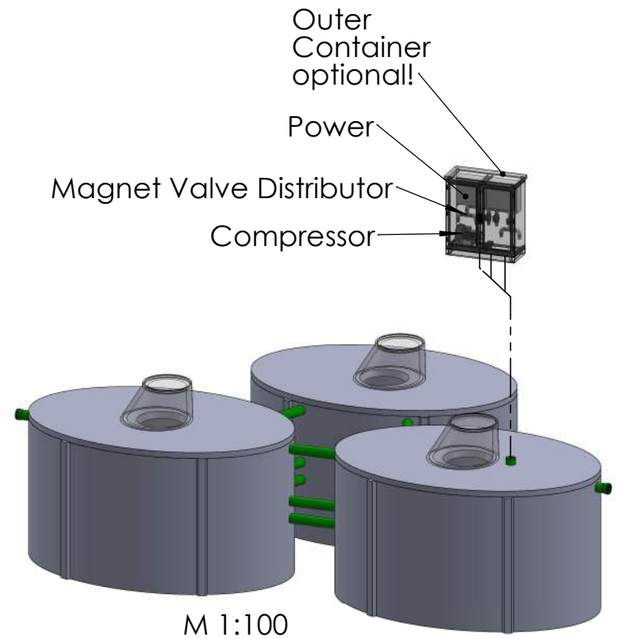

M 1:100

all measurements in cm!

						Material	
					DATE	NAME	Scale: 1:60	DIN A3
				dra.	25.01.2023	mgr	Part-No.:	
				chek.			Description: QuickONE+ 150 PE One Chamber SBR
				ClearFox [be clever]			
Rev.	Change	Date	Name	File: oBeton_QuickONE-WWTP_150pe			Page 1 / 1

This drawing is our property and may not be reproduced or made accessible to third parties without permission.